Proc. Schl. Eng. Tokai Univ., Ser. E
36 (2011) 43-47

Basic Study on Noise Reduction Technology for Small Vehicle with Giant Magnetostrictive Actuator

by

Hideaki KATO[*1], Yasuo OSHINOYA[*2], Shinya HASEGAWA[*3],
Tatsuya MORISHITA[*4] and Hirakazu KASUYA[*2]

(Received on Apr. 28, 2011 and accepted on Jul. 13, 2011)

Abstract

In recent years, the demand for noise reduction in car interiors has risen in the pursuit of improved ride comfort. In addition, improved mileage considering environmental issues is attracting interest, and methods of reducing noise to ensure quiethness inside the car must be efficient without compromising the light weight of the car. An active noise control (following ANC) system is now attracting attention, although more advanced technology is required, considering the need to balance weight reduction and a quiet interior. ANC outputs a sound wave in the opposite phase to the control sound source as noise, and with the amplitude of the noise to be reduced, and cancels the noise. In addition, there are many cases in which a speaker is used for the control sound source, but this study used a small vehicle and performed ANC using a magnetostrictive actuator as the output source. The giant magnetostrictive actuator is small, and space efficient, and the output level can be controlled satisfactorily within a car because it is light weight and has high output. A future problem is how the control algorithm controls, using a feedback algorithm, the noise that changes in a complicated manner depending on the environment. In this study, a giant magnetostrictive actuator to the windshield of the small vehicle as part of basic research, and the noise measured outside the vehicle was compared with the results of the experiment on the silencing effect inside the car.

Keywords: Active noise control, Giant magnetostrictive actuator, Small vehicle, Feedback algorithm

1. Introduction

The demand for noise reduction inside a vehicle has been recently increasing in the pursuit of improved ride comfort. Also, the improvement of mileage has attracted more and more attention from the viewpoint of environmental problems. Under such circumstances, the efficiency and light weight of the system used to maintain the quietness and reduce the noise in a vehicle have become important issues. In consideration of the trade-off between the improvement of quietness and reduction of weight and the requirement for highly advanced technology, an active noise control (ANC) system has been attracting much attention.

*1 Graduate Student, Course of Science and Technology
*2 Professor, Department of Prime Mover Engineering
*3 Assistant Professor, Department of Prime Mover Engineering
*4 Associate Professor, Department of Prime Mover Engineering

In this study, ANC is carried out using a small vehicle and a giant magnetostrictive actuator as a sound output source. The giant magnetostrictive actuator has a high output that is sufficiently controllable inside a vehicle space because it has high space efficiency even with its small size and light weight. The giant magnetostrictive actuator adopts a feedback algorithm. A future theme is how to control the noise that changes complicatedly depending on the environment. In this study, the giant magnetostrictive actuator was installed at the windshield of a small vehicle, and the noise reduction effect with and without ANC were compared for noise applied to the vehicle from outside the vehicle body.[1-4)]

2. ANC

Conventionally, a technique called passive noise control has been used to reduce noise. In passive noise control, sound-absorbing materials and reflectors are used to reduce

the noise through absorption and reflection. High-frequency noise is absorbed by the absorbing material and reflected by the reflectors owing to its linearity; as a result, the noise intensity decreases. However, the effect of the absorbing material is limited for low-frequency noise, which also weaves through the gaps between reflectors; therefore, the reduction of such noise is difficult. The size of a system for reducing noise with long wavelength and low frequency inevitably becomes large, which is a significant demerit of passive noise control.

In the ANC system, pseudonoise with the same amplitude and with a phase opposite to the target noise is artificially produced from a control sound source to cancel the target noise by means of interference between the pseudonoise and the target noise. Because the frequency and amplitude of the noise constantly change, those of the pseudonoise used to cancel the target noise should also change accordingly. To achieve this, the signal obtained near the noise source and the noise at the control point should be monitored continuously to calculate the frequency and amplitude and output the sound that can cancel the target noise. This method is particularly effective for noise with long wavelength and low frequency. In the conventional passive noise control using a sound-absorbing material, a large space is required to control noise with low frequency. In contrast, in the ANC system, no large space is required and only equipment to produce sound with a phase opposite to that of the target noise is necessary. In general, a frequency range where the ANC system is effective is considered to be 500 Hz or lower. By bringing the control sound source closer to the control point, the frequency range that is controllable with the ANC system can be expanded. The ANC system has not been practically applied to vehicles thus far because the noise condition in a vehicle changes complicatedly depending on the environment.[1,5]

3. Principle of system

3.1 *Classification of sound*

People in vehicles are surrounded by various sounds. These sounds include 1) information required to drive the vehicle, 2) comfortable sounds such as music, and 3) noise such as the sound of driving on the road (road noise) and wind noise generating during high-speed driving. These three types of sound are mutually related; how a person perceives these sounds is influenced by sensory and psychological factors. The purpose of this study is to reduce only the noise such as road noise and wind noise, and to make other sounds, such as information and comfortable sounds, clearer to provide a comfortable vehicle environment.[2] In the actual driving of vehicles, noise in the frequency range of below 300 Hz is most frequently heard.[6]

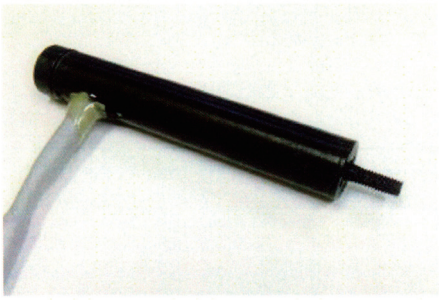

Fig. 1 Magnetostrictive actuator (made by GMM Tech)

3.2 *Giant magnetostrictive actuator*

A magnetic material is divided into domains called magnetic domains. Each magnetic domain shows spontaneous magnetization, and the crystal lattice of a magnetic material is spontaneously distorted along with the generation of spontaneous magnetization. Upon the application of external magnetic field, the directions of the spontaneous magnetization of the magnetic domains align. Along with the rotation of the spontaneous magnetization, the distortions of the spontaneous magnetization also align, leading to a deformation in the external shape of the magnetic material. A coil is wound around a giant magnetostrictive material composed of terbium, dysprosium, and iron, to form a giant magnetostrictive actuator. Control sound waves with a high sound pressure are expected to be produced by generating a large excitation force using the magnetostrictive effect exceeding 1,000 ppm generated upon the application of external magnetic field.[7] The giant magnetostrictive actuator is driven utilizing the deformation of the magnetic material. The shape of the magnetic material changes in an ultrashort period of microsecond order, and the force generated in association with the deformation is very large. In this study, the actuator was brought into contact with other materials such as a glass or acrylic plate to produce the sound used in ANC. Figure 1 shows the giant magnetostrictive actuator used in the experiment.[8]

3.3 *Control algorithm*

A feedback algorithm can be used to develop a control system considering the effect of noise if information such as the statistical characteristics of the target noise component is available. It is also possible to develop a control system considering the effect of error paths. Thus, the feedback algorithm is a superior control strategy in many points, and is the mainstream for mechanical control systems. One of the reasons for this is its high applicability resulting from hybrid processing of analog and digital processes. Filtering is carried out using a digital filter in a soundproof sealed box so that the phase of the noise and that of the pseudonoise

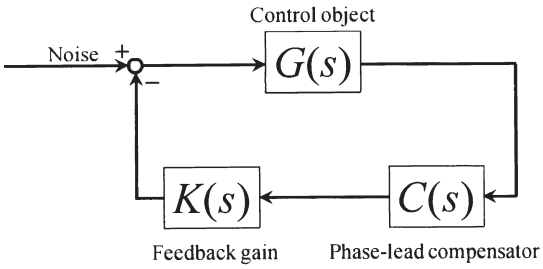

Fig. 2 Digital adaptive control block diagram

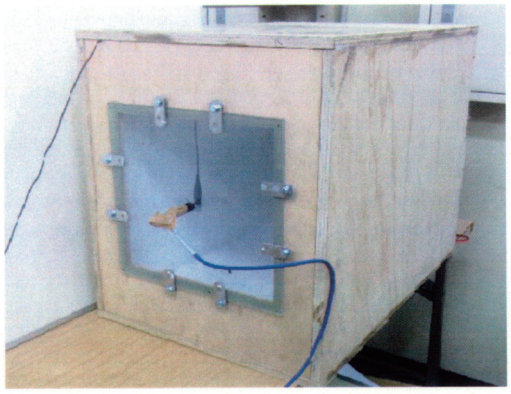

Fig. 3 Soundproofing sealing up box

produced by the control system are completely opposite. A compensator to compensate the phase lead was designed by the program using the following equation to control the noise. Figure 2 shows a block diagram of the digital adaptive control filter.

$$C(s)=\frac{Ts+0.1}{aTs+50}, \qquad 0<a<1 \qquad (1)$$

Here, T is given by the following equation for the for the frequency ω_{max} in the maximum phase lead.

$$\omega_{max}=\frac{1}{\sqrt{a}T} \qquad (2)$$

Here, a is obtained from the maximum phase-angle φ_{max} by the following equation.

$$a=\frac{1+\sin\phi_{max}}{1-\sin\phi_{max}} \qquad (3)$$

Therefore, for the noise frequencies of 260Hz, 340Hz, 500Hz in the experiments conducted by this study, T and a are as follows.

T_{260}=0.1, a_{260}=0.5
T_{340}=0.04, a_{340}=0.8
T_{500}=0.3, a_{500}=0.75

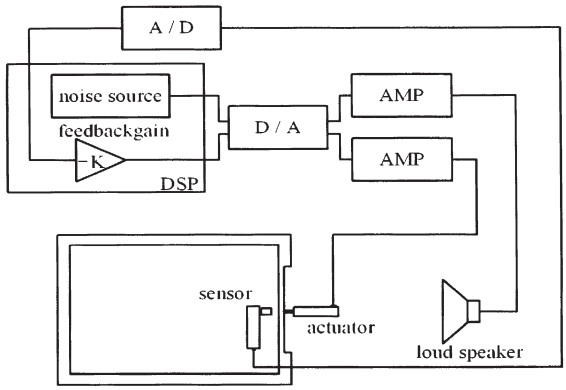

Fig. 4 Diagram of experimental equipment

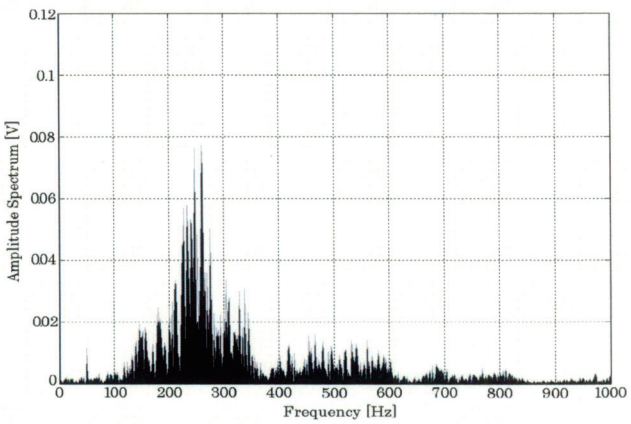

Fig. 5 White noise of acrylic plate transmission

4. Noise reduction experiment

4.1 *Experiment in soundproof sealed box*

4.1.1 *Experimental method*

Figure 3 shows a photograph of a soundproof sealed box with dimensions of 50 (L) × 40 (W) × 60 (D) mm^3 and a wall thickness of 15 mm.

An acrylic plate [30 (L) × 30 (W) × 2 (T) mm^3] with the same thickness as that used in the actual vehicle was attached at the center front of the soundproof sealed box.

In order to actively reduce noise level, arguments on vehicle's interior cavernous resonance becomes indispensable. However, in this paper, since this study is in initial stage, the sound of the vehicle's interior was not taken into consideration. In this study, we aim to reduce sound energy produced by the loudspeakers using giant magnetostrictive actuator. As shown in Fig. 4, a sine wave was output toward the acrylic plate from a speaker used as the noise source. The sound wave measured using the microphone placed in the soundproof sealed box was input to a computer through a digital signal processor (DSP). Sound with the same amplitude and opposite phase to that of the target noise was output from the giant magnetstrictive actuator using feedback control. Then, the level of noise transmitted through the acrylic plate and the noise reduction

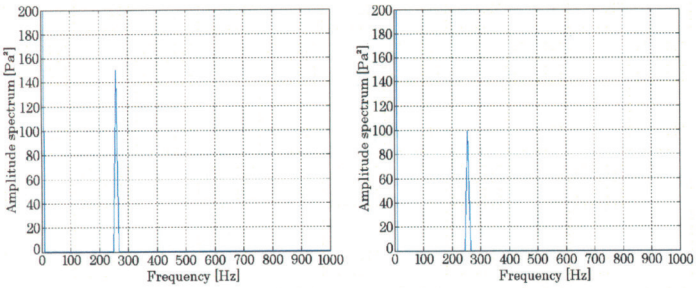

Fig. 6 Experimental results (frequency=260Hz)
(left: without ANC, right: with ANC)

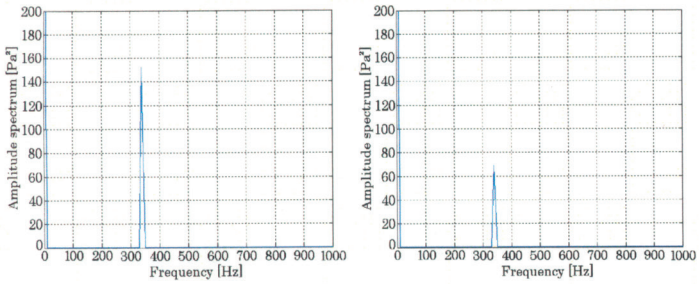

Fig. 7 Experimental results (frequency=340Hz)
(left: without ANC, right: with ANC)

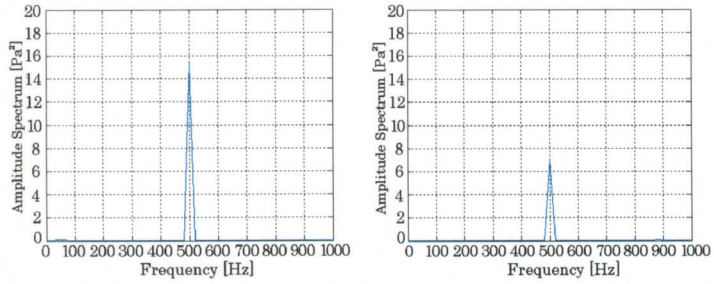

Fig. 8 Experimental results (frequency=500Hz)
(left: without ANC, right: with ANC)

rate for the waves of different frequencies in a sealed condition were measured. Figure 4 shows a diagram of the experimental equipment. Three arbitrary frequencies, i.e., 260, 340, and 500 Hz, were targeted considering the frequencies that are most frequently observed in actual driven vehicles and the results on the level of noise transmitted through a plate using white noise.

4.1.2 *Results*

White noise was output from a speaker used as the noise source. The result of the frequency analysis of white noise indicates that a spectral peak which passes through the acrylic plate was observed at 260 Hz, which is close to that of road noise (Fig. 5). On the basis of this result, sine waves of 260, 340, and 500 Hz, which easily pass through the acrylic plate, were output from the speaker. Figures 6, 7, and 8 show the experimental results for frequencies of 260, 340, and 500 Hz, respectively (left: without ANC, right: with ANC). As shown in Fig. 6, the amplitude spectrum for 260 Hz decreased by approximately 33% with ANC compared with that without ANC; however, the noise reduction effect was poor because of the distortion of the waveform output from the giant magnetostrictive actuator. As shown in Figs. 7 and 8, the amplitude spectra for 340 and 500 Hz decreased by approximately 55 and 56% with ANC, respectively, indicating that a good noise reduction effect was obtained.

Fig. 9 Electric vehicle (Friendry Eco)

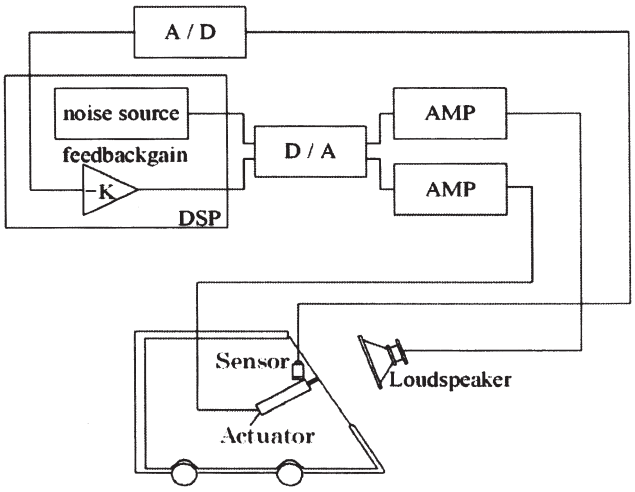

Fig. 10 Diagram of experimental equipment

4.2 *Experiment in small vehicle*

4.2.1 *Experimental method*

Figure 9 shows the small electric vehicle (Friendry Eco, Takeoka Jidosya Kogei) used in this study. The windshield is made of glass, the side windows are made of acryl, and the whole body is covered with fiber-reinforced plastic (FRP). A sine wave was output toward the windshield [60 (L) × 70 (W) × 2 (T) mm^3] from a speaker used as the noise source, as

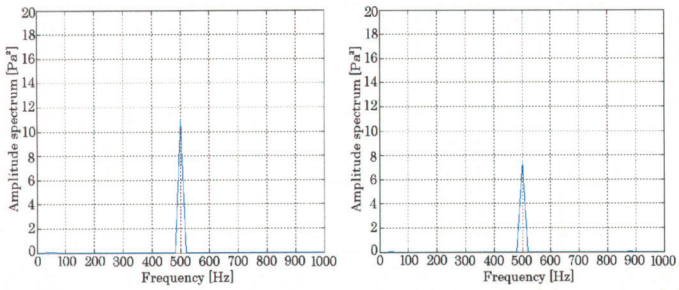

Fig.11 Experimental results (frequency=500Hz)
(left: without ANC, right: with ANC)

described in 4.1.1. The level of noise transmitted through the windshield and the noise reduction rate for waves of different frequencies inside the car were measured. Figure 10 shows a diagram of the experimental equipment. The control system shown in Fig. 3 was also used. The wave with a frequency of 500 Hz was most reduced and was examined in the experiment.

4.2.2 *Results*

The amplitude spectrum decreased by approximately 30% when using the sound generated by the giant magnetostrictive actuator when a sine wave with a frequency of 500 Hz was output from the speaker toward the windshield (Fig. 11). The noise reduction effect was small possibly because the sine wave output from the speaker was not sufficiently transmitted through the windshield owing to the thick glass and the sine wave was distorted at the windshield when the giant magnetostrictive actuator was operated. In addition, the phase lag of the equipment was compensated using a filter; however, this correction was not complete. As a result, a completely opposite phase was not achieved at the control point, leading to an unsatisfactory noise reduction effect.

5. Conclusions

In conventional technology, noise near the ears of the driver was reduced using speakers. On the other hand, in the future we aim to reduce noise in the vehicle's interior entirely. There are also demands of a system using both noise reduction near the driver's ears and the entire vehicle's interior. In this paper, with those basic positioning of noise control, we reduced sound energy produced by the loudspeakers using giant magnetostrictive actuator.

It was found that a noise reduction effect can be achieved by producing a sound wave having a waveform similar to that of the input wave but with the opposite phase. The type of sound wave output from the giant magnetostrictive actuator depends on the material and shape of the plate vibrated by the actuator. Therefore, a good performance of the ANC system can be obtained when a plate with which the giant magnetostrictive actuator can produce a sine wave without distortion can be designed. Therefore, it is necessary to examine the material and shape of the plate installed with the giant magnetostrictive actuator to develop a control sound source effective for the ANC system. In this study, ANC was carried out for sound transmitted through the acrylic plate and the glass windshield of a vehicle. We are planning to carry out experiments on ANC of various types of noise encountered during actual driving on roads.

Acknowledgments

We are pleased to acknowledge the considerable assistance of Mr. Masamitsu Koga, Mr. Hilmi Bin Helaladin, and Mr. Ryutaro Takahashi.

References

1) T. Tabata, S. Hasegawa, H. Hyodo, Y. Nakaji, T. Shikata: The Development of the Nissan Active Noise Control System, Nissan technical review **30**, (1991), 43-47, (in Japanese).
2) S. Hasegawa: Active Noise Control System (ANC) for Cars, Techno marine: bulletin of the Society of Naval Architects of Japan **761** (1993), 839-842, (in Japanese).
3) M. Nishimura, T. Usagawa, S. Ise: *Active Noise Control*, The sound technology series **9**, Corona Publishing Co.,Ltd, (2006), pp. 94-99, (in Japanese).
4) T. Inoue, H. Sano, H Matsuoka: Active Noise and Vibration Control Technology for New V6 Engine with Variable Cylinder Management system, IEICE Technical Report **106-20**, (2006), 37-42, (in Japanese).
5) K. Terai, H. Sano: Active Control System for Low-Frequency Road Noise, The jornal of the acoustical society of japane **59-7**, (2003), 424-425.
6) Janatul I. Mohammad, Stephen J. Elliott, The Performance of Active Control of Random Noise in Cars, Acoustical Society of America, 123 (4), (2008), 1838-1841.
7) Research committee on new generation electric and magnetic actuators: New Generation Electric and Magnetic Actuators, Technical Report of IEE Japan 1169, (2009), 34-41, (in Japanese).
8) Moritex Co., Ltd: Giant magnetostrictive material, http://www.moritex.co.jp/products/func/terfenol-d.php, (in Japanese).